ECE-656: Fall 2011

Lecture 10: Thermoelectric Effects: (electronic) heat flow

Professor Mark Lundstrom
Electrical and Computer Engineering
Purdue University, West Lafayette, IN USA

9/13/11

in Lecture 9

Current flow in the presence of QFL and temperature gradients:

$$J_{nx} = \sigma_n \frac{d\left(F_n/q\right)}{dx} - S_n \sigma_n \frac{dT_L}{dx}$$

S_n is the Seebeck coefficient in V/K.

Alternatively, we can write this equation as:

$$\frac{d\left(F_n/q\right)}{dx} = \rho_n J_{nx} + S_n \frac{dT_L}{dx}$$

(inverted form of the equations)

transport coefficients

$$\sigma_n = \int \sigma'_n(E)\,dE$$

$$\sigma'_n(E) = \frac{2q^2}{h}\frac{M(E)}{A}\lambda(E)\left(-\frac{\partial f_0}{\partial E}\right)$$

$$S_n = \left(-\frac{1}{qT_L}\right)(E_J - E_F)$$

$$S_n = \left(-\frac{1}{qT_L}\right)\frac{\int (E - E_F)\sigma'_n(E)\,dE}{\int \sigma'_n(E)\,dE}$$

$$S_n(T_L) = \left(\frac{k_B}{-q}\right)\left\{\frac{(E_C - E_F)}{k_B T_L} + \delta_n\right\}$$

$$\delta_n = \frac{\int \frac{(E - E_C)}{k_B T_L}\sigma'_n(E)\,dE}{\int \sigma'_n(E)\,dE}$$

heat transport

Thermoelectricity involves the flow of charge and **heat**, so in addition to the equation for the charge current, we need an equation for the heat current:

$$J_{Qx} = -\kappa_0 \, dT/dx \quad W/m^2$$

1) How is κ_0 related to the properties of the material?

2) How does this equation change when there is a current flow?

mathematical description

The answer is:

$$J_{Qx} = \left(S_n \sigma_n T_L\right) \frac{d\left(F_n/q\right)}{dx} - \kappa_0 \frac{dT_L}{dx} \quad W/m^2$$

Alternatively, we can write this equation as:

$$J_{Qx} = \pi_n J_{nx} - \kappa_n \frac{dT_L}{dx}$$

$$\pi_n = S_n T_L$$

$$\kappa_n = \kappa_0 - S_n^2 \sigma_n T_L$$

π is the Peltier coefficient in W/A

Important point: Both electrons and the lattice (phonons) carry heat. These equations refer only to the portion of the heat carried by the electrons.

in this lecture…

Our goal is to understand the physical origin of the Peltier effect and how it is related to the properties of the semiconductor.

outline

1) Introduction
2) **Heat transport by current flow**
3) Mathematical formulation
4) Discussion
5) Summary

This work is licensed under a Creative Commons Attribution-NonCommercial-ShareAlike 3.0 United States License.
http://creativecommons.org/licenses/by-nc-sa/3.0/us/

the Peltier effect

$J_n < 0$ $\qquad$ $J_n/(-q) > 0$ $\qquad$ $J_Q = \pi_n J_n > 0$

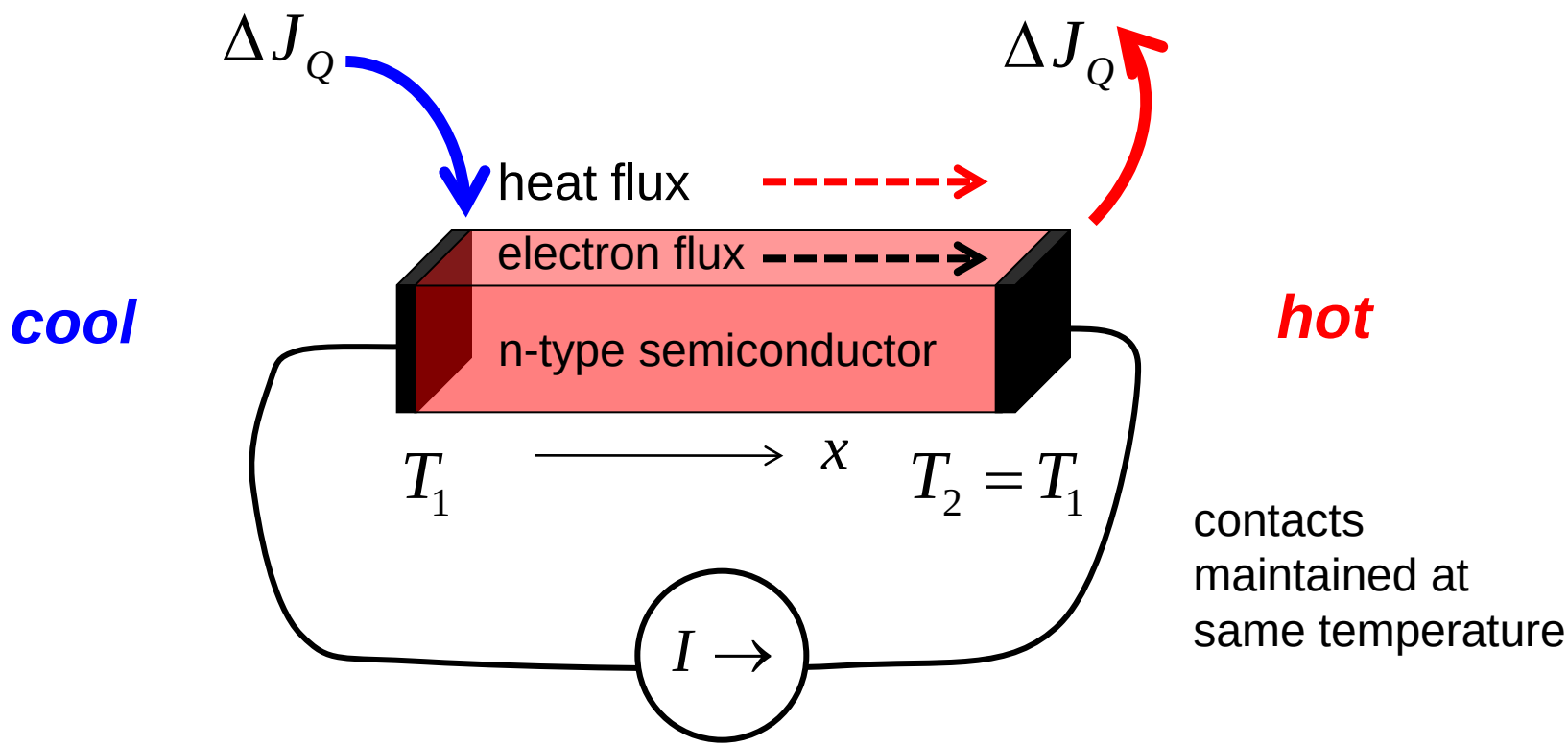

understanding the Peltier effect

Questions:

Why does $J_Q = \pi_n J_n$?
(when the two contacts are at the same temperature)

What determines the Peltier coefficient, π_n ?

Answer: We should draw an energy band diagram.

N-type semiconductor: equilibrium, $V = 0$

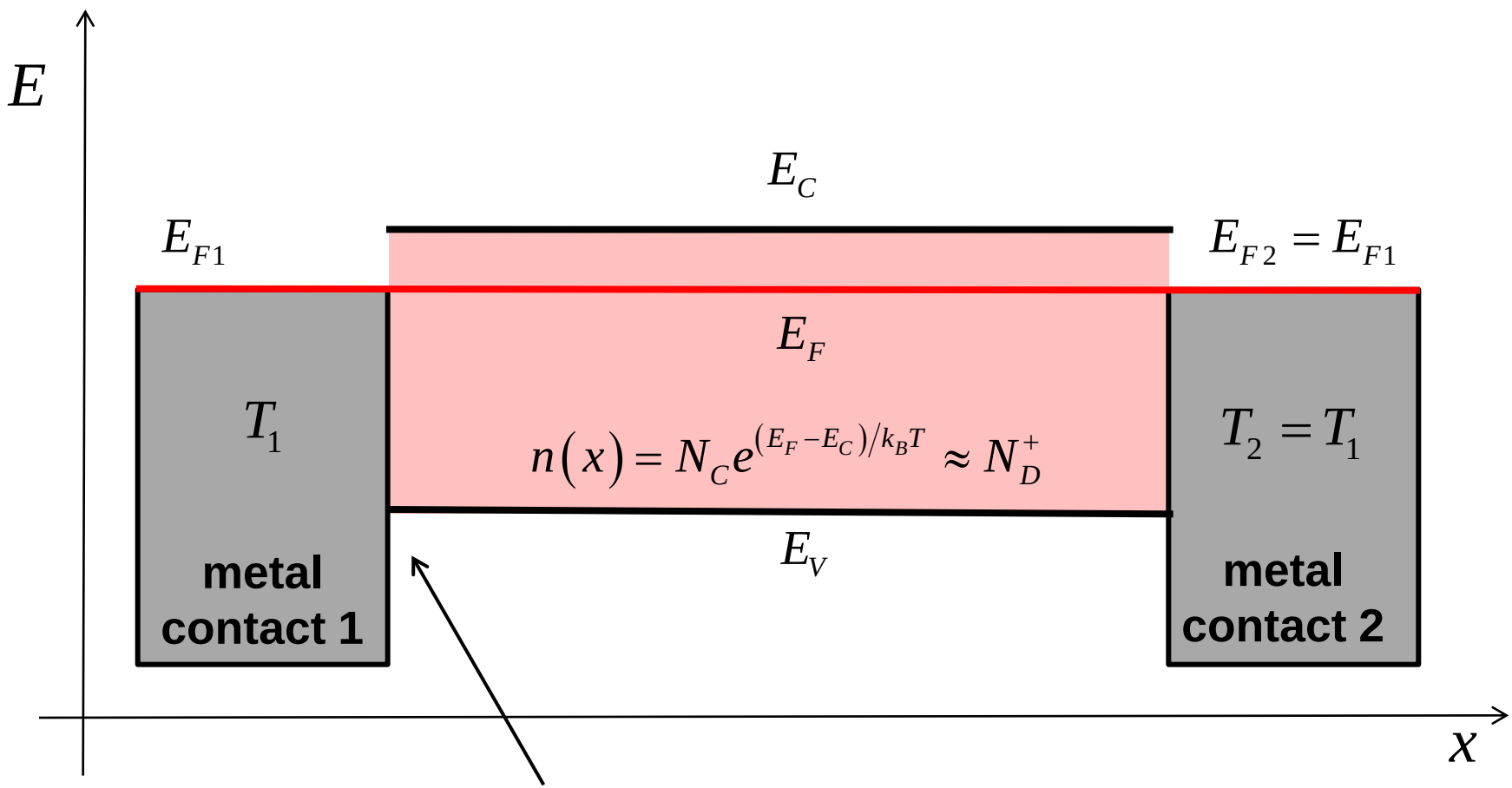

ideal contacts (no band bending)

N-type semiconductor: isothermal, $V > 0$

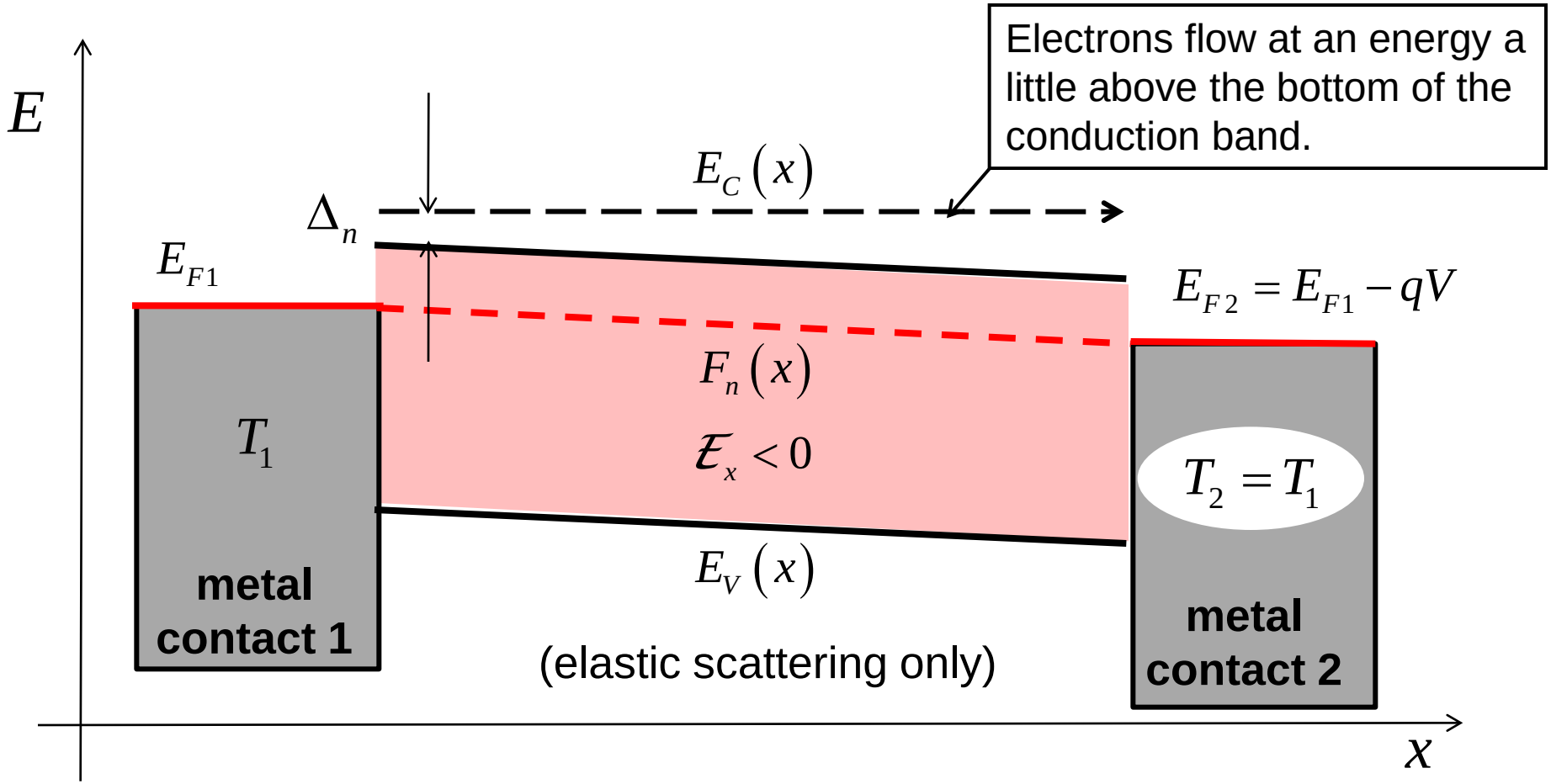

N-type semiconductor: isothermal, $V > 0$

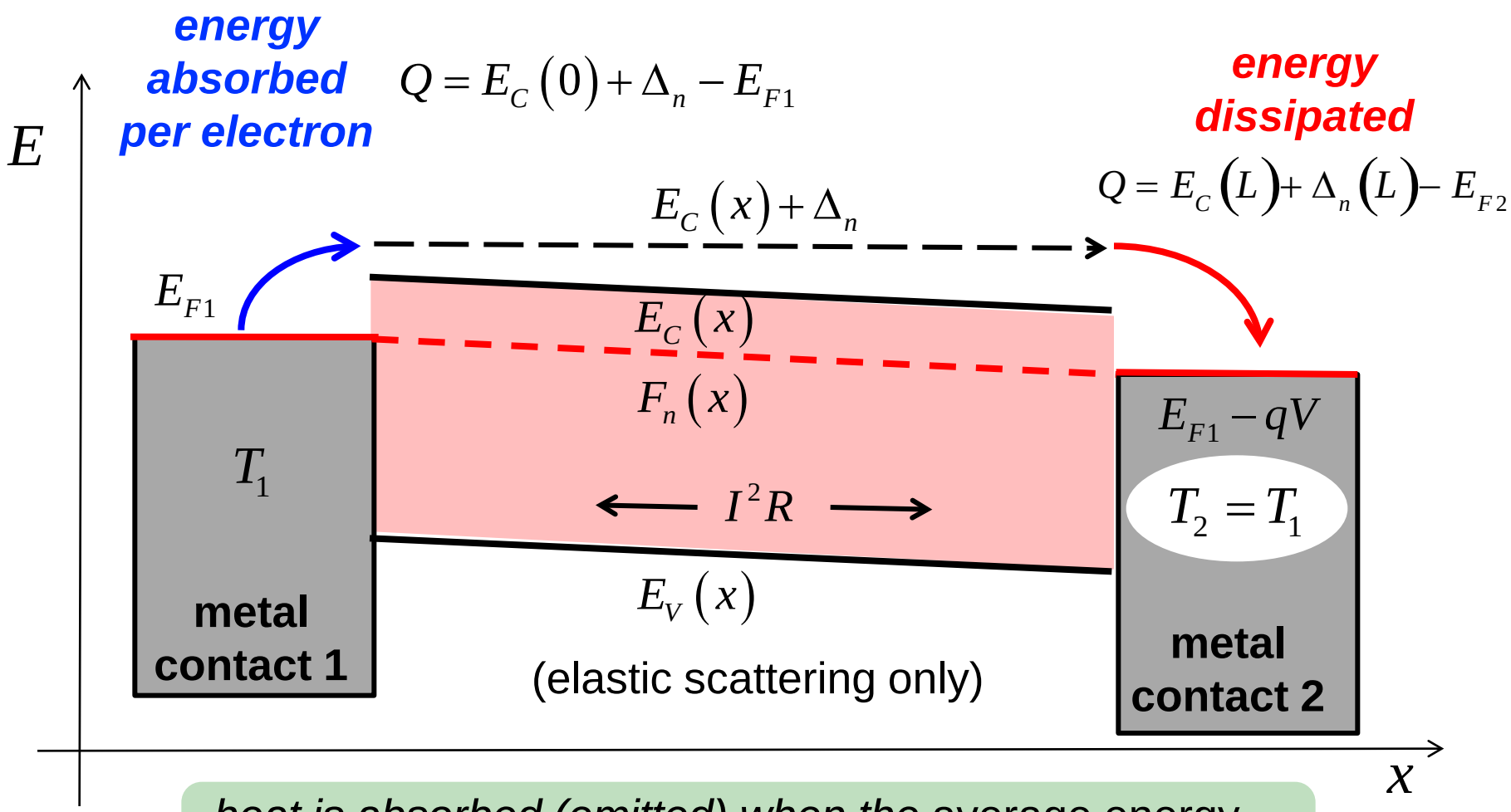

heat is absorbed (emitted) when the average energy at which the heat current flows increases (decreases)

Peltier coefficient

1) Electrons flow from left to right when $V_2 > V_1$.

2) The flux of electrons from left to right is $J_{nx}/(-q)$

3) Each electron absorbs and then carries an amount of heat: $Q = E_C(0) + \Delta_n - E_{F1}$

4) So the heat flux from left to right is:

$$J_{Q1} = \left[E_C(0) + \Delta_n - E_{F1}\right] \times J_{nx} / (-q) = \pi_n J_{nx}$$

$$\pi_n = -\frac{\left[E_C(0) + \Delta_n - E_{F1}\right]}{q}$$

(less than zero for an n-type semiconductor)

a remarkable result

$$\pi_n = -\frac{\left(E_C + \Delta_n - E_F\right)}{q}$$

$$\pi_n = T_L\left(\frac{k_B}{-q}\right)\left\{\frac{\left(E_C - E_F\right)}{k_B T_L} + \frac{\Delta_n}{k_B T_L}\right\}$$

$$S_n = \left(\frac{k_B}{-q}\right)\left\{\frac{\left(E_C - E_F\right)}{k_B T} + \frac{\Delta_n}{k_B T}\right\}$$

$\pi_n = T_L S_n$ "Kelvin relation"

The Peltier coefficient is proportional to the difference between the energy at which current flows and the Fermi energy – just as the Seebeck coefficient was.

physics of Peltier cooling

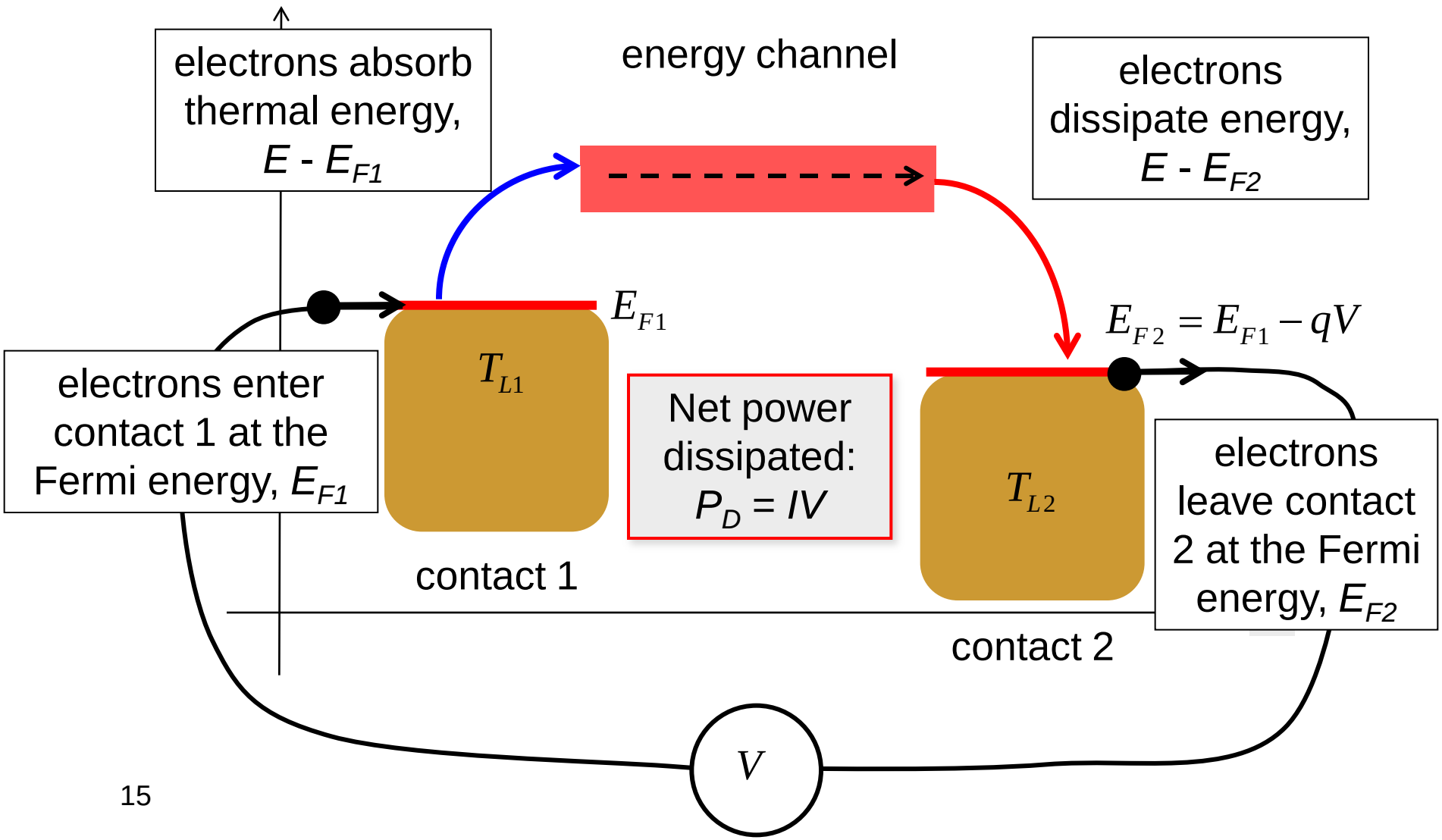

outline

1) Introduction
2) Heat transport by current flow
3) **Mathematical formulation**
4) Discussion
5) Summary

This work is licensed under a Creative Commons Attribution-NonCommercial-ShareAlike 3.0 United States License.
http://creativecommons.org/licenses/by-nc-sa/3.0/us/

Landauer picture

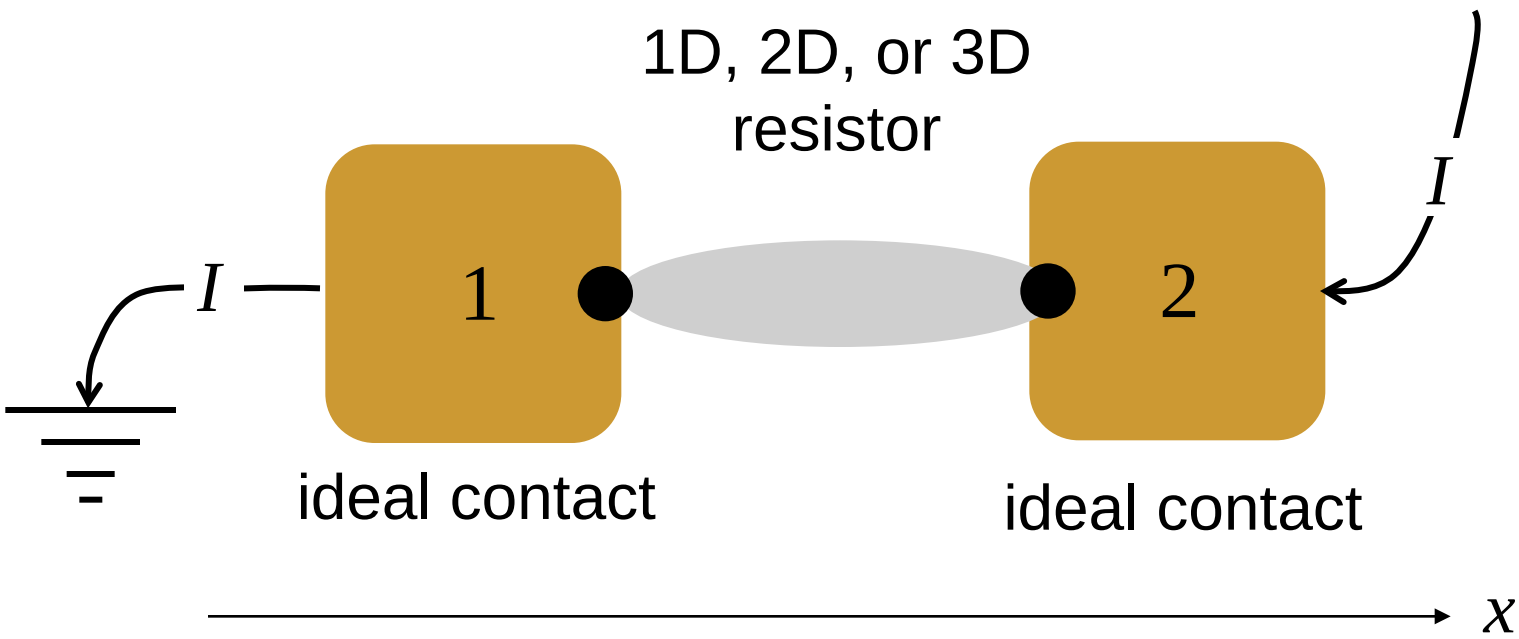

Current is positive when it flows **into** contact 2 (i.e. positive current flows in the -*x* direction).

$$I = \frac{2q}{h}\int T(E)M(E)(f_1 - f_2)\,dE \qquad I_Q(E) \propto (f_1 - f_2)$$

finally: differences in **both** E_F **and** T

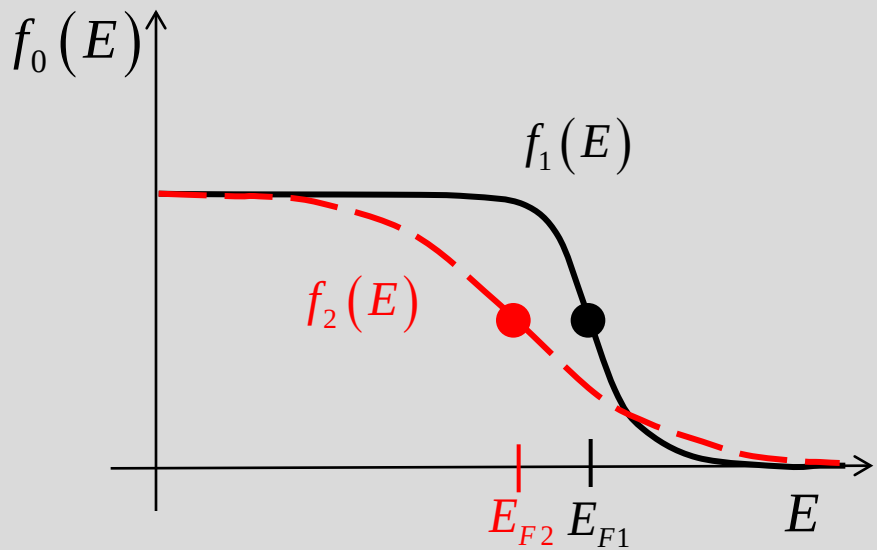

$$(f_1 - f_2) \approx \left(-\frac{\partial f_0}{\partial E}\right) q\Delta V - \left(-\frac{\partial f_0}{\partial E}\right) \frac{(E - E_F)}{T_L} \Delta T_L$$

electric current

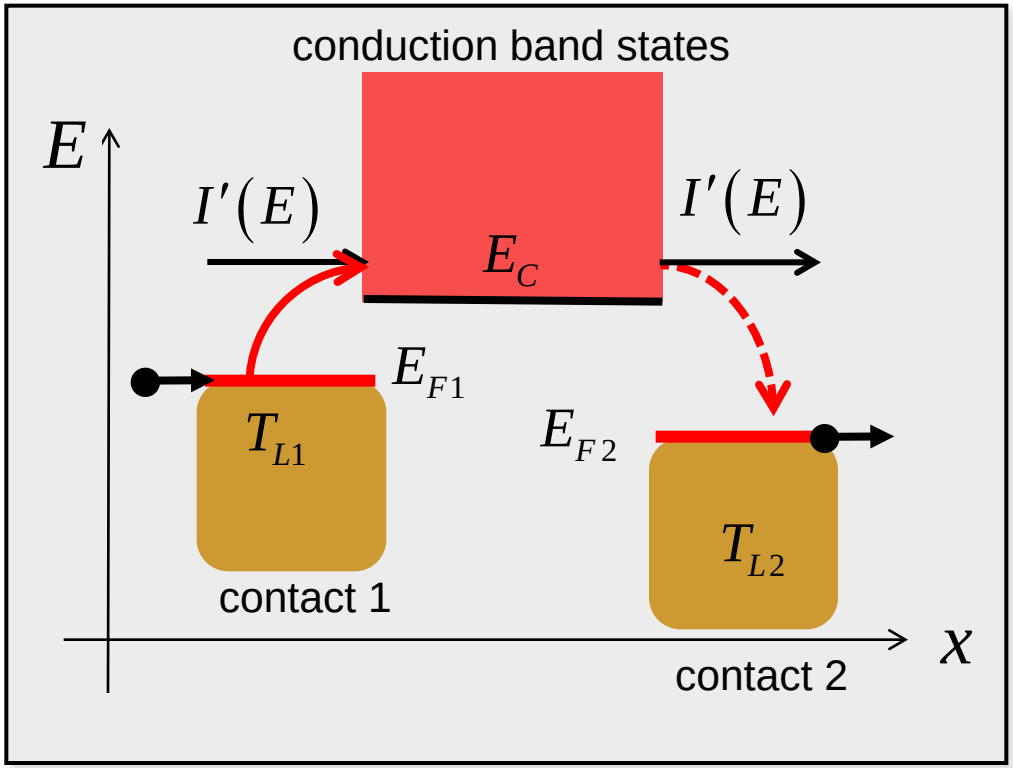

Electrons carry **charge**, so there is an electrical current.

$$I'(E) = \frac{2q}{h} T(E) M(E) (f_1 - f_2)$$

But electrons also carry **heat** (thermal energy), so there is a heat current too.

$$q \rightarrow (E - E_F)$$

Note: if $E_C > E_{F1}$, then electrons in the contact must absorb energy to flow in one of the energy channels in the device.

heat current

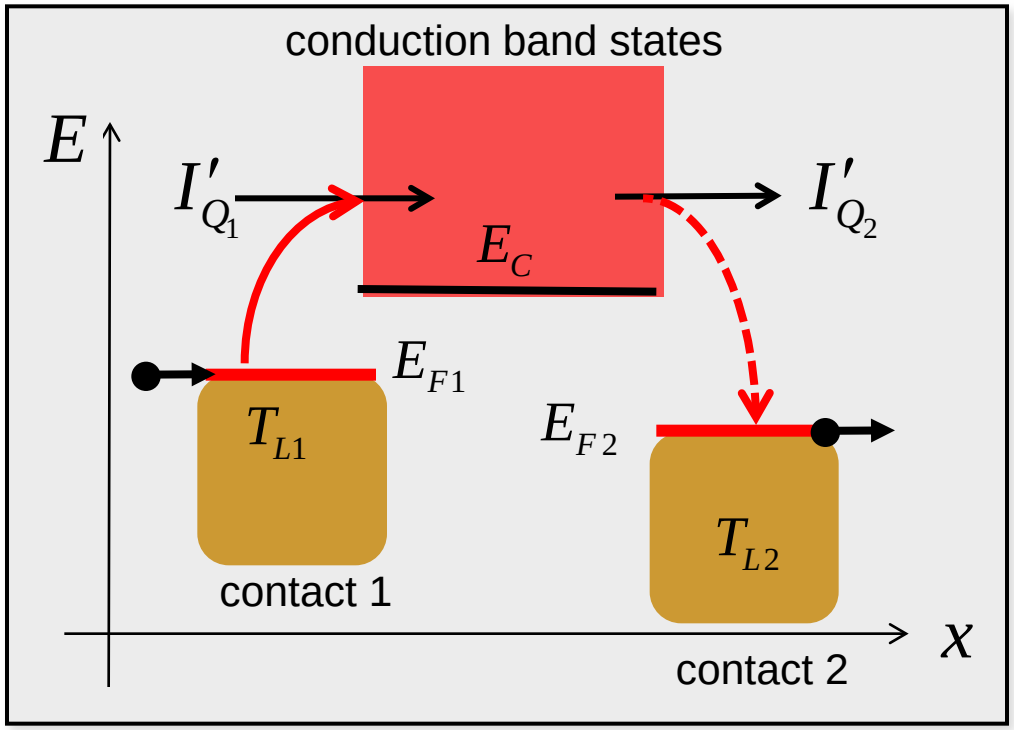

$$I'_{Q_1}(E) = \frac{2(E - E_{F1})}{h} T(E) M(E)(f_1 - f_2)$$

$$I'_{Q_2}(E) = \frac{2(E - E_{F2})}{h} T(E) M(E)(f_1 - f_2)$$

the math

$$I'_Q(E) = \frac{2(E - E_{F1})}{h} T(E) M(E)(f_1 - f_2)$$

$$(f_1 - f_2) \approx \left(-\frac{\partial f_0}{\partial E}\right) q\Delta V - \left(-\frac{\partial f_0}{\partial E}\right) \frac{(E - E_F)}{T_L} \Delta T$$

$$I'_Q(E) = -T_L S_T(E) \Delta V - K_0(E) \Delta T$$

$$K'_0(E) = \frac{2}{h} \frac{(E - E_F)^2}{T_L} T(E) M(E) \left(-\frac{\partial f_0}{\partial E}\right)$$

the result

$$I_Q'(E) = -T_L S_T(E)\Delta V - K_0(E)\Delta T$$

(First minus sign because positive electric current is in the negative x-direction but positive heat current is in the positive x-direction.)

$$K_0'(E) = \frac{(E - E_F)^2}{q^2 T_L} G'(E)$$

$$I_Q = \int I_Q'(E)\,dE = -T_L S_T \Delta V - K_0 \Delta T$$

$$K_0 = \int \frac{(E - E_F)^2}{q^2 T_L} G'(E)\,dE$$

K_0 is the short circuit thermal conductance.

outline

1) Introduction
2) Heat transport by current flow
3) Mathematical formulation
4) **Discussion**
5) Summary

This work is licensed under a Creative Commons Attribution-NonCommercial-ShareAlike 3.0 United States License.
http://creativecommons.org/licenses/by-nc-sa/3.0/us/

re-cap

$$I = G\Delta V + S_T \Delta T$$

$$I_Q = -T_L S_T \Delta V - K_0 \Delta T$$

Coupled current equations: temperature differences cause electric current to flow and voltage differences cause heat current to flow.

$$G = \frac{2q^2}{h}\int T(E)M(E)\left(-\frac{\partial f_0}{\partial E}\right)dE$$

$$S_T = -\int \frac{(E - E_F)}{qT_L} G'(E)\,dE$$

$$K_0 = \int \frac{(E - E_F)^2}{q^2 T_L} G'(E)\,dE$$

(Thermal conductivity only refer to electrons - not lattice.)

exercise

Derive the corresponding **coupled current** equations for 3D, diffusive transport.

$$I = G\Delta V + S_T \Delta T$$

$$I_Q = -T_L S_T \Delta V - K_0 \Delta T$$

$$J_{nx} = \sigma \frac{d\left(F_n/q\right)}{dx} - s_T \frac{dT_L}{dx}$$

$$J_{Qx} = T_L s_T \frac{d\left(F_n/q\right)}{dx} - \kappa_0 \frac{dT_L}{dx}$$

inverting the equations

$$I = G\Delta V + S_T \Delta T$$

$$I_Q = -T_L S_T \Delta V - K_0 \Delta T$$

$$\Delta V = \frac{1}{G} I - \frac{S_T}{G} \Delta T$$

$$\Delta V = RI - S\Delta T$$

$$S = \frac{S_T}{G}$$ (Seebeck coefficient)

inverting the equations (ii)

$$I = G\Delta V + S_T \Delta T$$

$$I_Q = -T_L S_T \Delta V - K_0 \Delta T$$

$$\Delta V = RI - S\Delta T$$

$$S = \frac{S_T}{G}$$

$$I_Q = -\pi I - K_e \Delta T$$

$\pi = T_L S$ (Peltier coefficient)

(Kelvin relation)

$$K_e = K_0 - \pi S G$$

(open-circuit thermal conductance)

Peltier coefficient

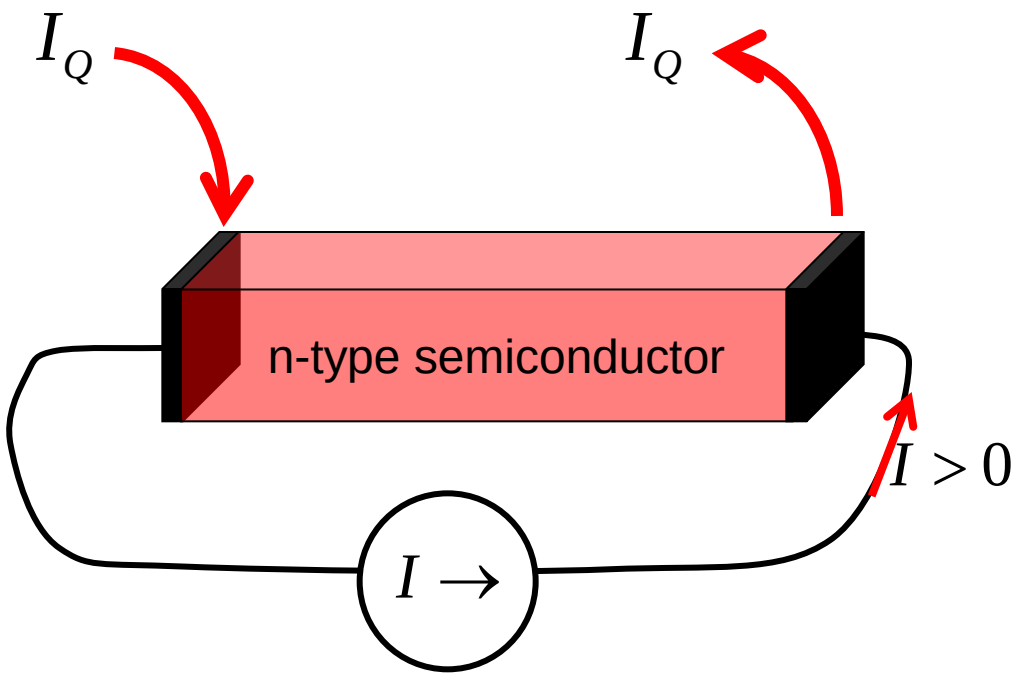

$$I_Q = -\pi I - K_e \Delta T$$

$$\pi = T_L S$$

$\pi < 0$ for *n*-type
$\pi > 0$ for *p*-type

summary

$$I = G\Delta V + S_T \Delta T$$

$$I_Q = -T_L S_T \Delta V - K_0 \Delta T$$

- - - - - - - - - - - - -

$$\Delta V = RI - S\Delta T$$

$$I_Q = -\pi I - K_e \Delta T$$

$$G = \frac{2q^2}{h}\int T(E)M(E)\left(-\frac{\partial f_0}{\partial E}\right)dE$$

$$S_T = -\int \frac{(E - E_F)}{qT_L} G'(E)\,dE$$

$$K_0 = \int \frac{(E - E_F)^2}{q^2 T_L} G'(E)\,dE$$

$$S = \frac{S_T}{G}$$

$$K_e = K_0 - \pi S G$$

for bulk 3D semiconductors

$$J_x = \sigma \mathcal{E}_x - s_T \, dT_L / dx$$

$$J_x^q = T_L S_T \mathcal{E}_x - \kappa_0 \, dT_L / dx$$

$$\mathcal{E}_x = \rho J_x + S \frac{dT_L}{dx}$$

$$J_x^q = \pi J_x - \kappa_e \frac{dT}{dx}$$

(diffusive transport)

$$\sigma = \int \sigma'(E) \, dE$$

$$\sigma'(E) = \frac{2q^2}{h} \lambda(E) \frac{M(E)}{A} \left(-\frac{\partial f_0}{\partial E} \right)$$

$$s_T = -\int \frac{(E - E_F)}{qT_L} \sigma'(E) \, dE$$

$$\kappa_0 = \int \frac{(E - E_F)^2}{q^2 T_L} \sigma'(E) \, dE$$

$$S = S_T / \sigma \qquad \pi = T_L S$$

$$\kappa_e = \kappa_0 - \pi S \sigma$$

lattice thermal conductivity

$$J_x^q = \pi_n J_n - \kappa \frac{dT}{dx} \qquad \kappa = \kappa_n + \kappa_L$$

Both electrons and lattice vibrations carry heat – we have been discussing the electronic part.

In metals, heat conduction by electrons dominates: $\kappa_e >> \kappa_L$

In semiconductors, lattice vibrations dominate: $\kappa_L >> \kappa_e$

Example: TE transport parameters of n-Ge

ρ_n Ω-m

S_n V/K

π_n W/A = V

κ_n W/m-K

$$\mathcal{E}_x = \rho_n J_{nx} + S_n \frac{dT_L}{dx} \quad \left(\frac{\text{V}}{\text{m}}\right)$$

$$J_{Qx} = \pi_n J_{nx} - \kappa \frac{dT_L}{dx} \quad (\text{W})$$

$$N_D = 10^{15}\ \text{cm}^{-3}$$

$$T_L = 300\ \text{K}$$

$$\mu_n = 3200\ \text{cm}^2/\text{V-s}$$

$$n_0 = N_C e^{(E_F - E_c)/k_B T_L} \approx N_D$$

$$N_C = 1.04 \times 10^{19} \quad \text{cm}^{-3}$$

TE transport parameters of n-Ge: resistivity

ρ_n Ω-m

S_n V/K

π_n W/A = V

κ_n W/m-K

$$\mathcal{E}_x = \rho_n J_{nx} + S_n \frac{dT_L}{dx} \quad \left(\frac{\text{V}}{\text{m}}\right)$$

$$J_{Qx} = \pi_n J_{nx} - \kappa \frac{dT_L}{dx} \quad (\text{W})$$

$$N_D = 10^{15}\ \text{cm}^{-3} \approx n_0$$

$$\mu_n = 3200\ \text{cm}^2/\text{V-s}$$

$$\sigma_n = n_0 q \mu_n \quad \text{S/cm}$$

$$\rho_n = 1/n_0 q \mu_n \approx 2\ \Omega\text{-cm}$$

TE transport parameters of n-Ge: Seebeck coeff.

$\rho_n = 2\Omega\text{-m}$

$S_n \quad \text{V/K}$

$\pi_n \quad \text{W/A} = \text{V}$

$\kappa_n \quad \text{W/m-K}$

$$\mathcal{E}_x = \rho_n J_{nx} + S_n \frac{dT_L}{dx} \quad \left(\frac{\text{V}}{\text{m}}\right)$$

$$J_{Qx} = \pi_n J_{nx} - \kappa \frac{dT_L}{dx} \quad (\text{W})$$

$$N_D = 10^{15}\ \text{cm}^{-3} \approx n_0$$

$$n_0 = N_C e^{(E_F - E_c)/k_B T_L}$$

$$N_C = 1.04 \times 10^{19} \quad \text{cm}^{-3}$$

$$T_L = 300\ \text{K}$$

$$(E_c - E_F)/k_B T_L \approx \ln(N_C/n_0) \approx 9.3$$

$\delta_n \approx 2$ (non-degenerate, 3D)

$$S_n = \left(\frac{k_B}{-q}\right)\left\{\frac{(E_c - E_F)}{k_B T_L} + \delta_n\right\} \approx -970\ \mu\text{V/K}$$

TE transport parameters of n-Ge: Peltier coeff.

$$\rho_n = 2\Omega\text{-m}$$

$$S_n = -970\ \text{V/K}$$

$$\pi_n \quad \text{W/A} = \text{V}$$

$$\kappa_n \quad \text{W/m-K}$$

$$\mathcal{E}_x = \rho_n J_{nx} + S_n \frac{dT_L}{dx} \quad \left(\frac{\text{V}}{\text{m}}\right)$$

$$J_{Qx} = \pi_n J_{nx} - \kappa \frac{dT_L}{dx} \quad (\text{W})$$

$$\pi_n = T_L S_n \approx -0.3\ \text{V}$$

TE transport parameters of n-Ge: Peltier coeff.

$$\rho_n = 2\Omega\text{-m}$$

$$S_n = -970 \text{ V/K}$$

$$\pi_n = -0.3 \text{ W/A} = \text{V}$$

$$\kappa_n \quad \text{W/m-K}$$

$$\mathcal{E}_x = \rho_n J_{nx} + S_n \frac{dT_L}{dx} \quad \left(\frac{\text{V}}{\text{m}}\right)$$

$$J_{Qx} = \pi_n J_{nx} - \kappa \frac{dT_L}{dx} \quad (\text{W})$$

$$\frac{\kappa_n}{T_L \sigma_n} = L$$ (Lorenz number)

$$L \approx 2\left(k_B/q\right)^2$$ (non-degenerate, 3D)

$$\sigma_n = 1/\rho_n$$

$$\kappa_n = 2.2\times10^{-4} \quad \text{W/m-K}$$

TE transport parameters of n-Ge:

$$\rho_n = 2\Omega\text{-m}$$

$$S_n = -970 \quad \text{V/K}$$

$$\pi_n = -0.3 \quad \text{W/A} = \text{V}$$

$$\kappa_n = 2.2\times 10^{-4} \quad \text{W/m-K}$$

$$\mathcal{E}_x = \rho_n J_{nx} + S_n \frac{dT_L}{dx} \quad \left(\frac{\text{V}}{\text{m}}\right)$$

$$J_{Qx} = \pi_n J_{nx} - \kappa \frac{dT_L}{dx} \quad (\text{W})$$

All of these parameters depend on the temperature and carrier concentration (Fermi level).

Note also:

$$\kappa_L = 58 \text{ W/m-K} >> \kappa_n$$

summary

1) Introduction
2) Heat transport by current flow
3) Mathematical formulation
4) Discussion
5) **Summary**

the TE equations (3D, diffusive)

$$J_x = \sigma \mathcal{E}_x - s_T \, dT_L / dx$$

$$J_x^q = T_L S_T \mathcal{E}_x - \kappa_0 \, dT_L / dx$$

$$\mathcal{E}_x = \rho J_x + S \frac{dT_L}{dx}$$

$$J_x^q = \pi J_x - \kappa_e \frac{dT}{dx}$$

(diffusive transport)

$$\sigma = \int \sigma'(E) \, dE$$

$$\sigma'(E) = \frac{2q^2}{h} \lambda(E) \frac{M(E)}{A} \left(-\frac{\partial f_0}{\partial E} \right)$$

$$s_T = -\int \frac{(E - E_F)}{qT_L} \sigma'(E) \, dE$$

$$\kappa_0 = \int \frac{(E - E_F)^2}{q^2 T_L} \sigma'(E) \, dE$$

$$S = S_T / \sigma \qquad \pi = T_L S$$

$$\kappa_e = \kappa_0 - \pi S \sigma$$

physics of Peltier cooling

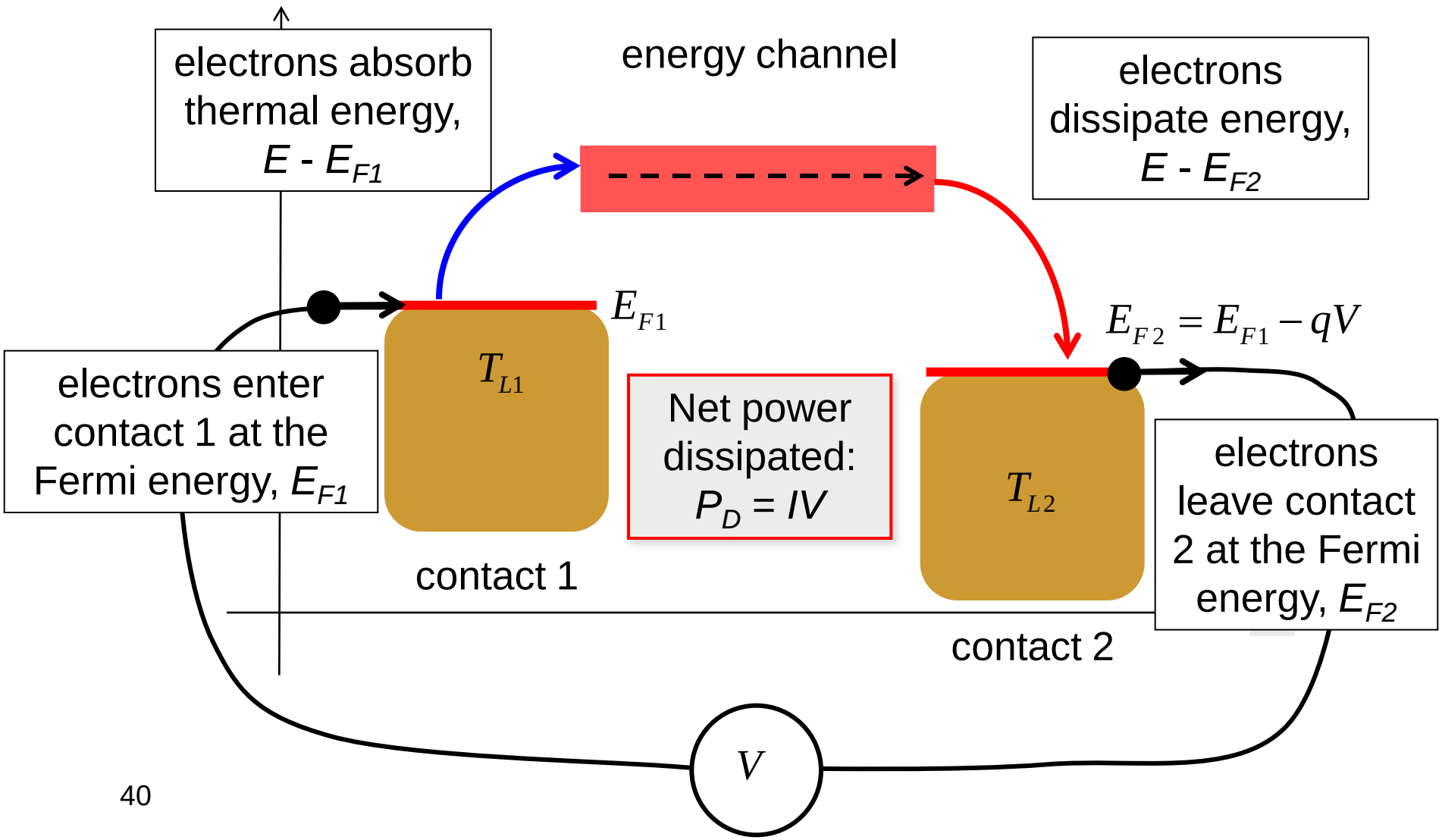

questions

1) Introduction
2) Heat transport by current flow
3) Mathematical formulation
4) Discussion
5) Summary